PG-POWER-09

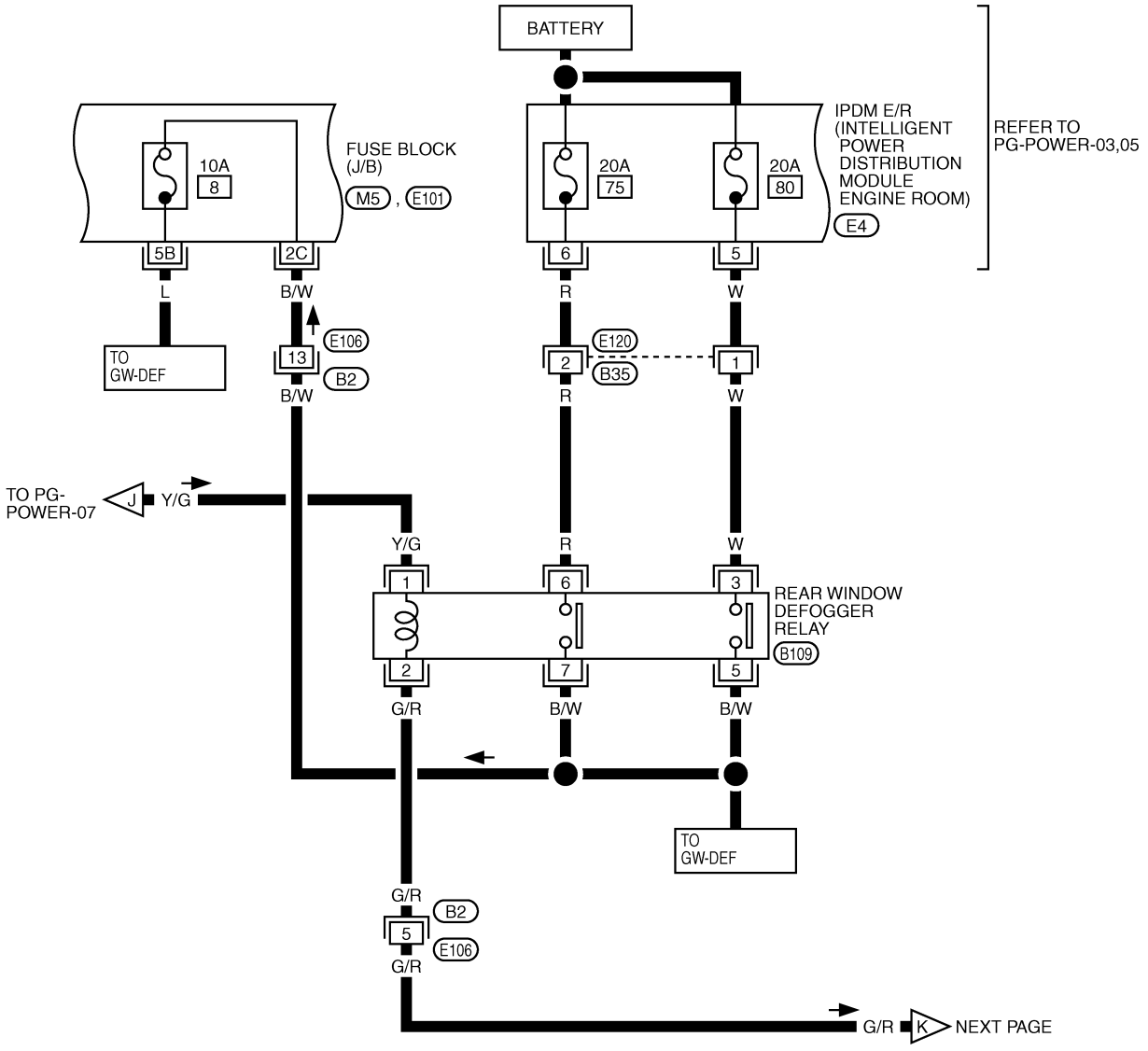

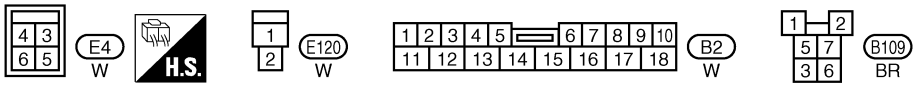

REFER TO THE FOLLOWING.

M5 , E101 -FUSE BLOCK-JUNCTION BOX (J/B)

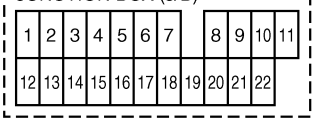

TKWT1575E